CREO PARAMETRIC

TABULATION						
FRAME	CURRENT ER	"A"	"B"	"C"	"X"	NETT WT (Kg)
SOL2-FI	ECO-163464	459.5	257	211	211	101
SOL2-GI	ECO-163464	459.5	257	211	211	107
SOL2-KI	ECO-163464	479.5	277	222	222	113
SOL2-MI	ECO-163464	494.5	292	230	230	124
SOL2-PI	ECO-163464	514.5	312	240	240	132
SOL2-UI	ECO-163464	544.5	342	255	255	141

COUPLING DISC					
SAE	"AN"	"AM"	"AP"	"AR"	"V"
6.5	30.2	6	8.7	200.0	215.8
7.5	30.2	8	8.7	222.3	241.2

REL NO	REV	DETAIL	DWN	CKD	APVD	DATE
ECO-163464	C	PRODUCTION RELEASE	MMA	UKD	S.JOSHI	26JUL16
		ZONE D2; ADD ±3 ON "C" DIM				

①-REMOVABLE COVER FOR ACCESS TO AVR
②-REMOVABLE COVER FOR ACCESS TO MAIN TERMINALS
* FOR KNOCKOUT DETAILS REFER TERMIANL BOX DRAWING

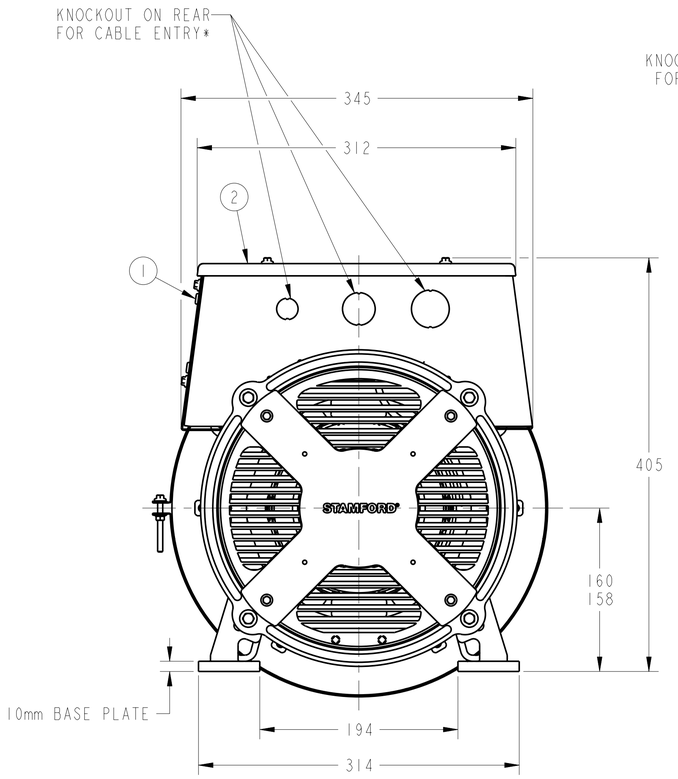

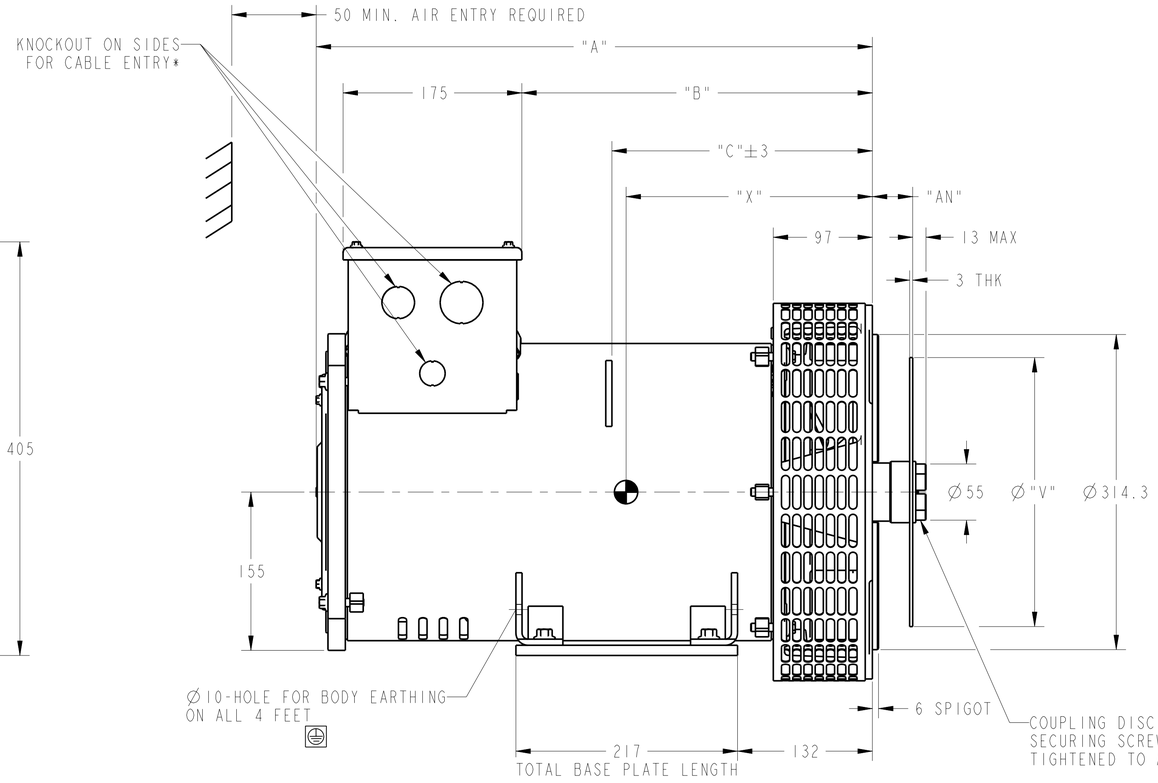

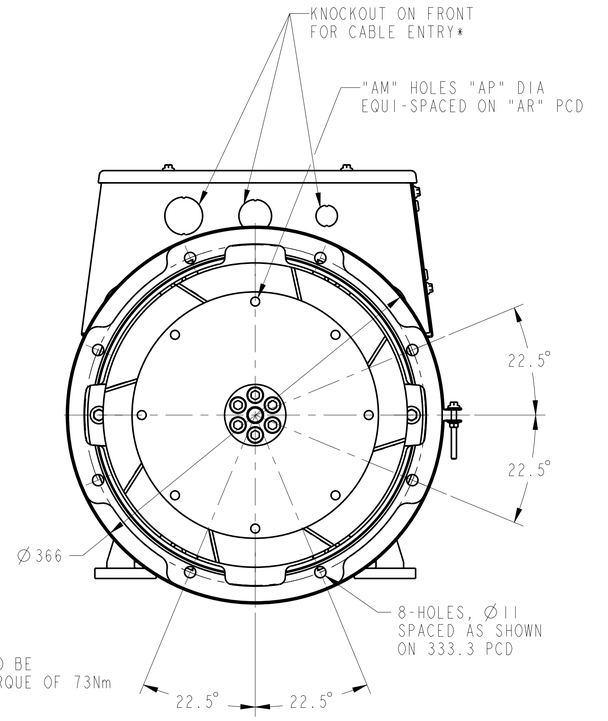

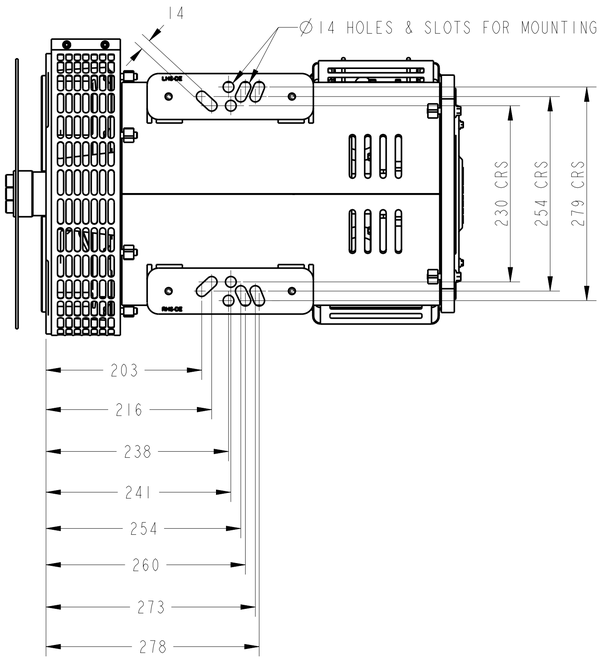

SCALE 1:4
FOOT PRINT VIEW

UNLESS OTHERWISE SPECIFIED, ALL DIMENSIONS ARE IN MILLIMETERS
DIM: X ±1 | X.X ±0.1 | X.XX± 0.01
HOLE: 0.00- 4.99 +0.15/-0.08 | 5.00- 9.99 +0.20/-0.10 | 10.00-17.49 +0.25/-0.13 | 17.50-24.99 +0.30/-0.13
ANG TOL: ± 0.5° SCALE: 1:3

SIM TO -
DO NOT SCALE PRINT
^ CONFIDENTIAL ^
PROPERTY OF CUMMINS GENERATOR TECHNOLOGIES

DWN M.ATHANI
CKD U.DAGWALE
APVD S.JOSHI
DATE 13JAN16
FOR INTERPRETATION OF DIMENSIONING AND TOLERANCING, SEE ASME Y14.5M-1994 | FIRST USED ON

SITE CODE: PUN

Green Power

1-BEARING ALTERNATOR SAE5 ADAPTER
SOL2 4-POLE (160CH)

DWG SIZE A1 | A054H897 | SHEET 1 | REV C